SUMMER 2025

Computer Science and Engineering Department

CSE251: Electronic Circuits

Project

Title: To Design, Implement and Performance Study of a Power Supply Section

SUBMITTED TO: DR. MD. HABIBUR RAHMAN

Adjunct Faculty, Department of CSE, East West University Professor and Chairman, Department of EEE, University of Dhaka

SUBMITTED BY: LAB GROUP: 03

COURSE TITLE: Electronic Circuits

COURSE CODE: CSE251

SECTION:01

Group Members Name	ID No.
Belal Hossain	2023-2-60-010
Noor Mohammad	2023-3-60-396
Rezwan Ahmed	2023-3-60-418

Date Of Submission: 01/09/2025

Title: To Design, Implement and Performance Study of a Power Supply.

Objectives:

- To design a DC power supply that converts standard AC mains voltage into a regulated DC voltage suitable for use in electronic circuits.
- To implement the designed power supply using readily available components such as diodes, capacitors, resistors, and Zener diodes.
- To analyze the performance of the power supply by observing how it responds to different load resistances.
- To understand the principles of rectification, filtering, and voltage regulation through practical implementation.
- To study the behavior of output voltage and current under varying load conditions, and verify regulation effectiveness.

Theory:

A regulated power supply is a crucial electronic circuit used to convert high-voltage alternating current (AC) from the mains supply to a low-voltage direct current (DC). This DC output is typically used to power various electronic devices that require a stable and consistent voltage. The design of a regulated power supply includes several essential stages:

Transformer:

- ✓ **Function:** The transformer is the first and most important component in the power supply system. Its primary function is to step down the high-voltage alternating current (AC) from the mains supply to a lower voltage AC suitable for powering electronic circuits.

- ✓ **Detailed Description:**

    - A center-tapped transformer is used in this design. This transformer has a secondary winding that is divided into two equal halves, providing two AC voltages that are used to create the full-wave rectified output. This configuration is crucial for the full-wave rectifier since both halves of the AC cycle is used to provide a more efficient conversion than half-wave rectification.

    - The transformer works on the principle of electromagnetic induction. When an AC voltage is applied to the primary coil, it induces a voltage in the secondary coil due to the magnetic field generated by the current in the primary coil. The number of turns in the primary and secondary coils determines whether the transformer will step the voltage up or down.

    - **Output Voltage Selection:** In this design, a 6V to 16V center-tapped transformer was selected. The center tap allows the use of both positive and negative halves of

the AC signal, which is necessary for creating a full-wave rectified output.

- **Why it's needed:** A transformer is necessary to reduce the AC voltage to a level that can be safely rectified and regulated. If the transformer were not used, the high AC voltage from the mains would damage other components like the diodes or the Zener diode.

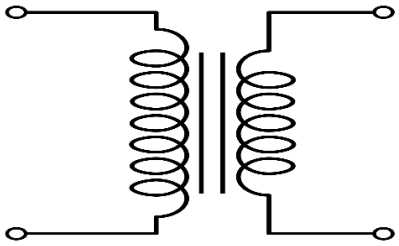

Fig: Transformer

Rectifier (Diodes):

- **Function:** The rectifier is used to convert AC (Alternating Current) into DC (Direct Current). Since the AC waveform alternates direction, the diodes are used to rectify the current, ensuring that it only flows in one direction.

- **Detailed Description:**

  - **Full-Wave Rectification:** The circuit uses a full-wave rectifier consisting of two diodes (1N4007). A full-wave rectifier makes use of both halves of the AC cycle, improving efficiency. During the positive half of the AC cycle, one diode conducts, and during the negative half-cycle, the second diode conducts. This ensures that the output voltage is smooth and utilizes the entire AC cycle.

  - **Center-Tapped Transformer:** The use of a center-tapped transformer is critical for this arrangement. The center tap divides the secondary coil into two equal parts, allowing the rectifier to work with both positive and negative halves of the AC waveform.

  - **Why it's needed:** Without rectification, the AC voltage would fluctuate between positive and negative values, which is unsuitable for most electronic devices. By converting it into pulsating DC, it becomes usable for electronic circuits that require stable voltage.

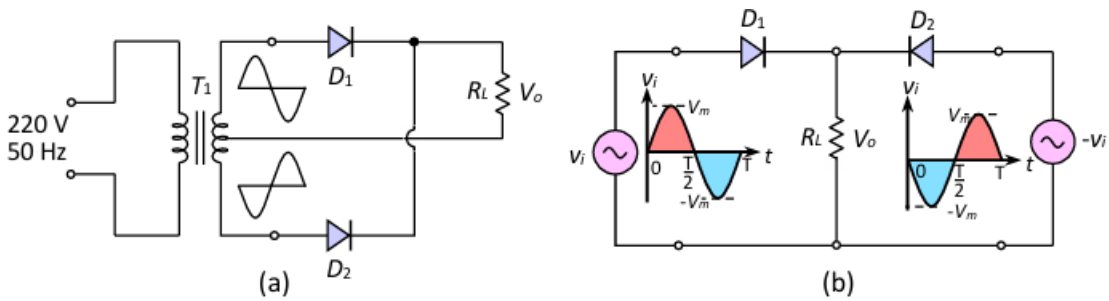

Fig.3-24: (a) Two-diode full-wave rectifier, (b) Equivalent circuit of two half-wave rectifier

Capacitor (Filtering):

- ✓ **Function:** After the rectification stage, the output is still pulsating DC, which fluctuates between zero and the peak voltage. A capacitor is used to smooth these fluctuations, producing a more consistent and stable DC voltage.

- ✓ **Detailed Description:**

  - **Capacitor Function:** In this design, a 470µF to 1000µF electrolytic capacitor is used for filtering. When the rectified voltage rises, the capacitor charges to the peak voltage. During the troughs of the waveform, when the rectified voltage falls, the capacitor discharges its stored charge, filling in the gaps and maintaining a smoother output.

  - **High Capacitance Value:** The larger the capacitance, the more energy it can store, and the better it can smooth out voltage ripples. A capacitor with high capacitance (like 470µF) is chosen to ensure that even under varying load conditions, the output voltage remains stable and free from fluctuations.

  - **Why it's needed:** Most electronic devices require smooth DC voltage to operate efficiently. The filtering stage removes the ripple from the rectified DC, making it usable for devices that require a steady supply.

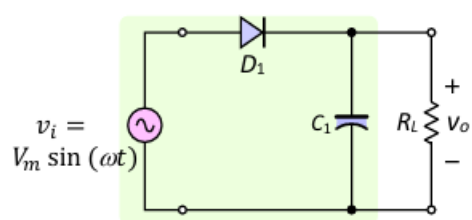

Fig.3-38: Half-wave rectifier circuit with shunt capacitor filter

Zener Diode (Voltage Regulation):

- ✓ **Function:** The Zener diode is used for voltage regulation. It maintains a constant output voltage despite variations in the input voltage or changes in the load.

- ✓ **Detailed Description:**

  - **Zener Diode in Reverse Breakdown:** The Zener diode is designed to operate in reverse breakdown mode, which means it conducts current in the reverse direction when the voltage exceeds its breakdown voltage (e.g., 5.6V for this project). When the voltage exceeds the breakdown voltage, the Zener diode starts to conduct, clamping the output voltage and preventing it from rising above a certain threshold.

  - **Operation:** If the voltage exceeds the breakdown voltage, the Zener diode effectively "clamps" the voltage by conducting excess current and maintaining a steady voltage across the load. This ensures that the output voltage remains stable even as the input voltage fluctuates.

  - **Why it's needed:** In a regulated power supply, it's essential to maintain a constant output voltage to ensure that the connected circuits receive a stable power supply. The Zener diode ensures that any fluctuations in the input voltage do not affect the output.

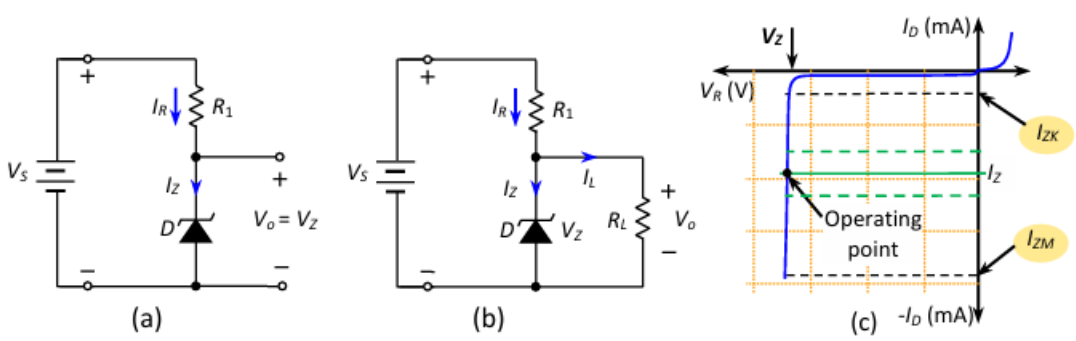

Fig.3-47: (a) Zener diode voltage regulator without load resistance, (b) Zener diode voltage regulator with load resistance, and (c) Operating point on the Zener diode characteristic curve

Resistors:

- ✓ **Function:** Resistors are used to control the current flow through different parts of the circuit. They help to limit the current to components like the Zener diode and LED, ensuring they don't get damaged.

- ✓ **Detailed Description:**

  - **Series Resistor:** The 220Ω resistor (R1) limits the current going into the Zener diode, preventing it from overheating or being damaged. This resistor ensures that the Zener diode gets just the right amount of current to function properly in reverse breakdown mode.

- **Load Resistors:** The other resistors, such as 1kΩ, 5kΩ, and 10kΩ, are used to simulate different load conditions in the experiment. As the resistance changes, the current flowing through the circuit also changes according to Ohm's Law (I = V/R).

- **Why it's needed:** Resistors control the current at various points in the circuit to ensure that each component gets the proper amount of current. Without resistors, components might be exposed to excessive current, which could cause damage.

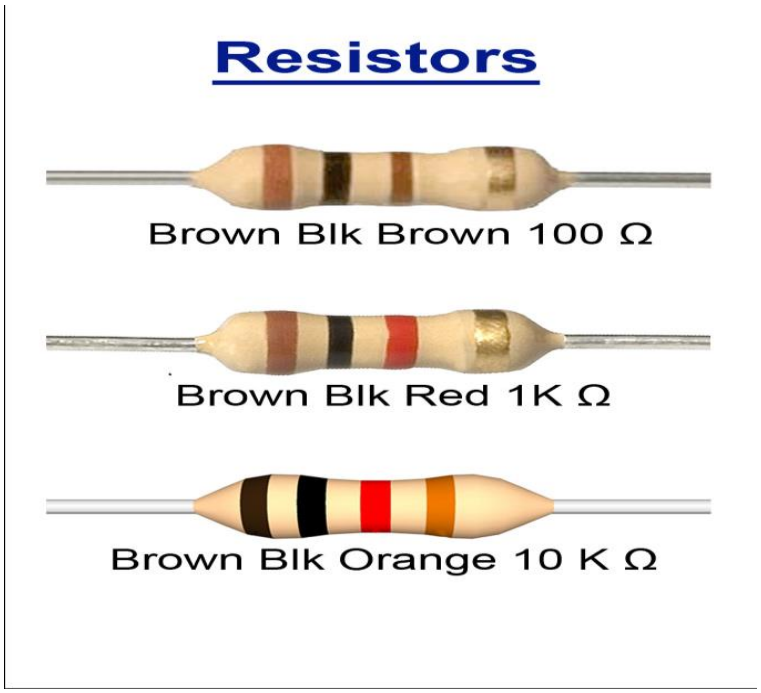

LED (Load Indicator):

- ✓ **Function:** The LED acts as a visual indicator to show that the power supply is functioning correctly.

- ✓ **Detailed Description:**

  - The LED, combined with its current-limiting resistor, ensures that the current through the LED is kept at a safe level. When the circuit is powered on and the output voltage is correct, the LED lights up, indicating that the power supply is active and providing the required voltage.

  - Why it's needed: The LED is essential for confirming the operational status of the power supply. It provides immediate feedback that the circuit is powered and functioning as expected.

Multimeter (Measurement):

- ✓ **Function:** The multimeter is used to measure the output voltage and current at various stages of the circuit to ensure it is operating correctly under different load conditions.

- ✓ **Detailed Description:**

  - The multimeter is connected across the output to measure the DC voltage produced by the power supply. It is also used to measure the current flowing through the load resistor to verify the load regulation and current behavior under different resistance values.

  - **Why it's needed:** The multimeter is essential for verifying the performance of the power supply and ensuring that the output voltage and current are within acceptable limits.

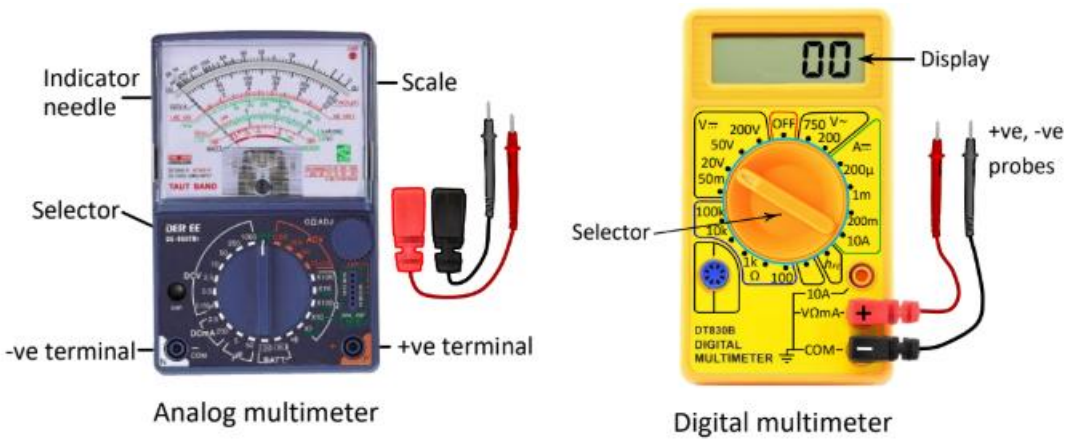

Fig.1-101: Analog and digital multimeters

Breadboard:

A breadboard is a prototyping tool used to build and test electronic circuits without the need for soldering. It consists of rows of holes that allow components like resistors, diodes, and capacitors to be inserted and interconnected. The breadboard simplifies the process of circuit design, testing, and debugging.

- **Power Rails:** The sides of the breadboard are marked with positive (+) and negative (-) rails for easy power distribution throughout the circuit.

- **Terminal Strips:** The central area of the breadboard has rows where components are placed and interconnected. The rows are connected internally in groups, allowing multiple components to share connections.

- **Usage:** For this power supply project, the breadboard will be used to assemble the transformer, rectifier, capacitor, Zener diode, and resistors according to the circuit diagram, enabling easy modification and testing.

- **Why it's Needed:**

  - **Quick Prototyping**: The breadboard allows for easy assembly and modification of the power supply circuit, making it ideal for experimentation.

  - **No Soldering:** Components can be inserted and removed without soldering, saving time and reducing errors.

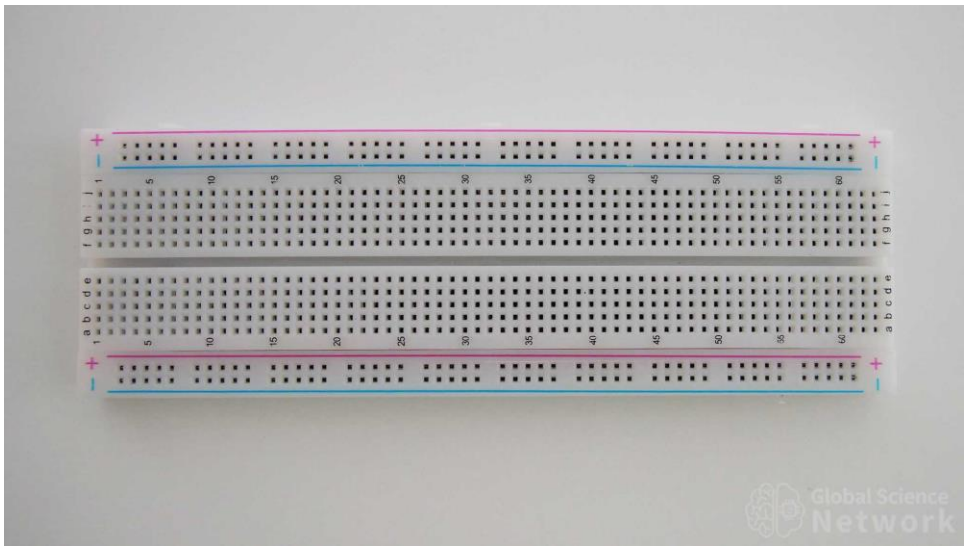

Fig: Breadboard

Working Diagram:

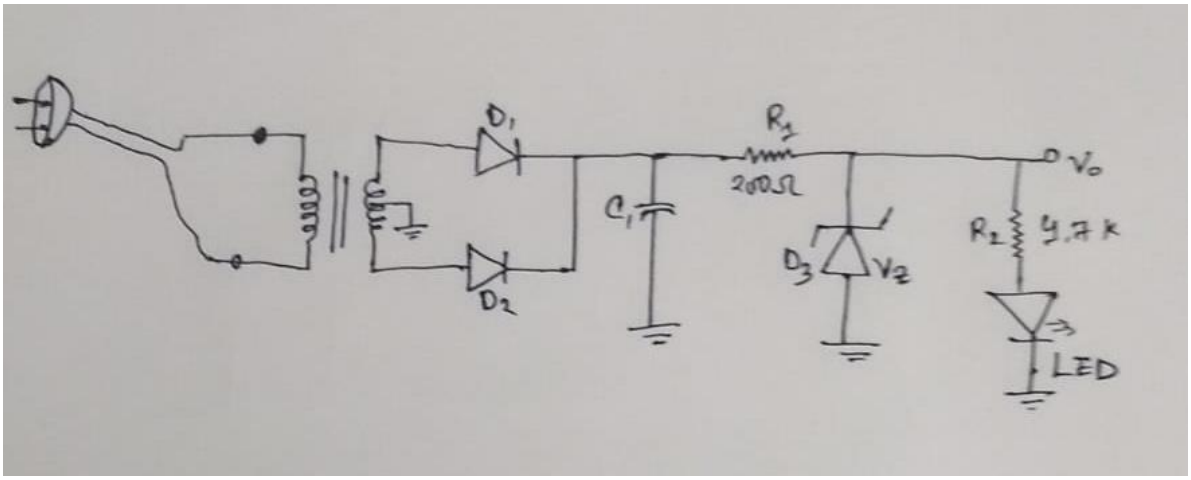

Apparatus Required

1. Breadboard
2. Transformer (Center Tapped – 6V to 16V)
3. Rectifier Diodes (2 pieces – typically 1N4007)
4. Capacitor (470µF to 1000µF, rated 25V or higher)
5. Zener Diode (5V to 12V)
6. Resistors: (200Ω - 1Watt, 1k Ω, 5k Ω, 10k Ω)
7. LED
8. Plug Wires and Connecting Leads
9. Multimeter (for voltage and current measurements)
10. Power Source (AC mains or regulated transformer supply

Experimental Datasheet:

No. of Observations	Resistance(Ω)	I_o(mA)	V_o(V)
1	0.25k Ω	7.6 mA	3.8 V
2	0.50k Ω	6.2 mA	4.9 V
3	1k Ω	4.6 mA	5.4 V
4	2.2k Ω	2.7 mA	5.6 V
5	3.3k Ω	1.7 mA	5.7 V
6	4.7k Ω	1.3 mA	5.65 V
7	5k Ω	1.1 mA	5.62 V
8	6k Ω	0.9 mA	5.68 V
9	6.7k Ω	0.8 mA	5.6 V
10	7k Ω	0.7 mA	5.62 V
11	8.3k Ω	0.6 mA	5.65 V
12	9.3k Ω	0.55 mA	5.6 V
13	10k Ω	0.5 mA	5.7 V

Operational Circuit (ON):

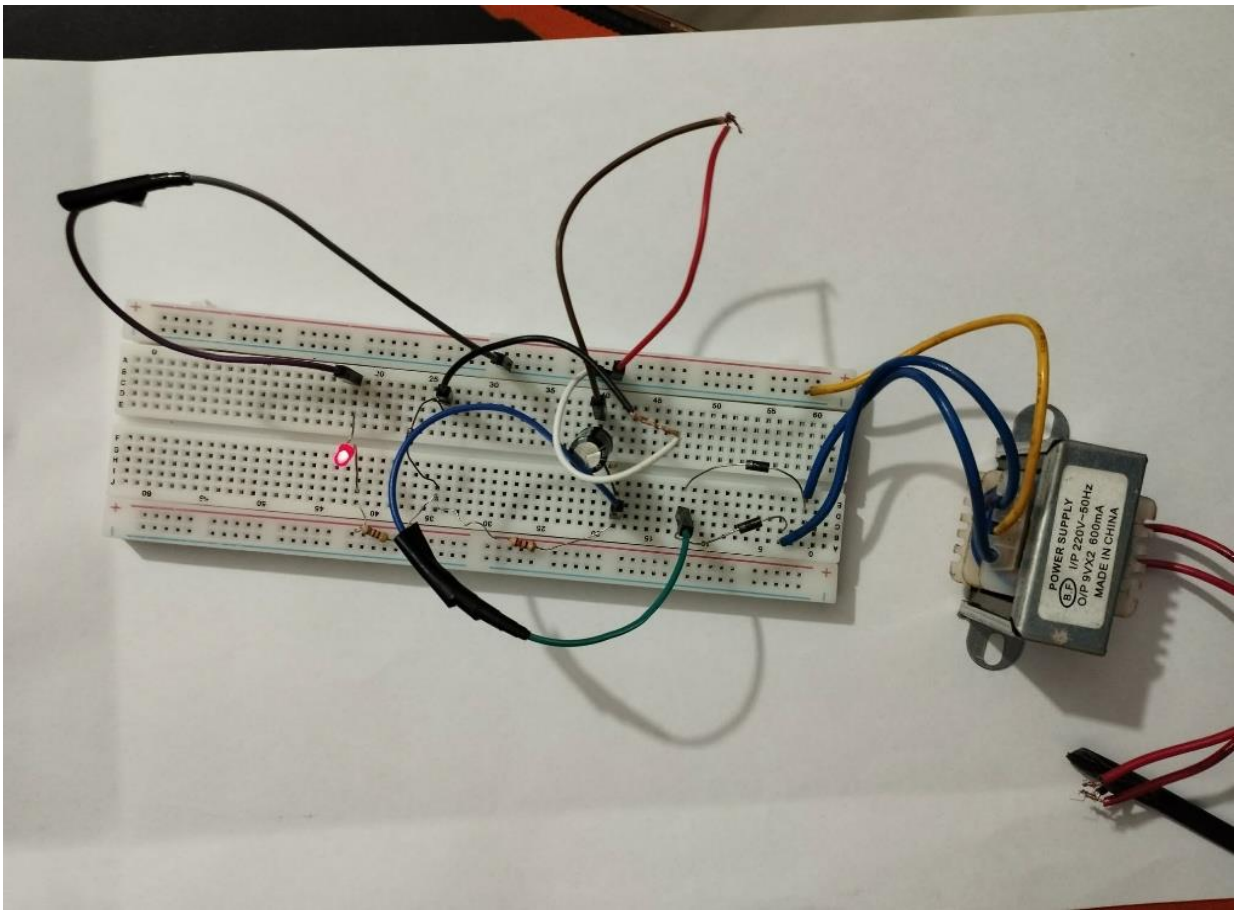

Operational Circuit (OFF):

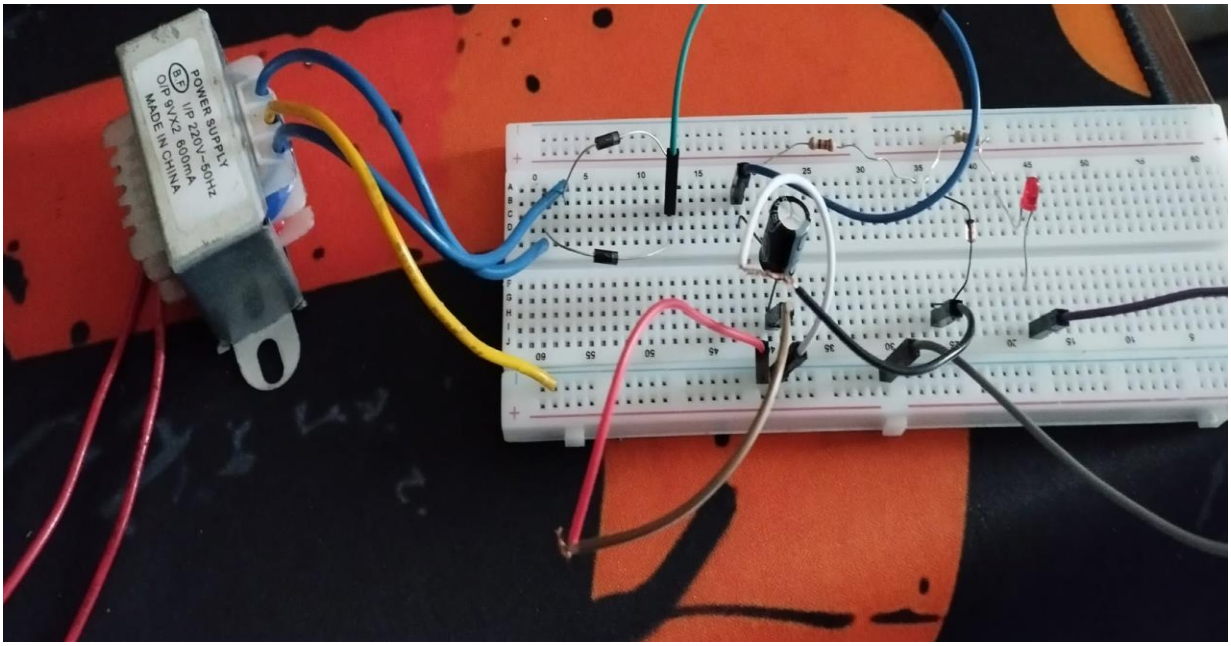

V_o VS I_o Graph:

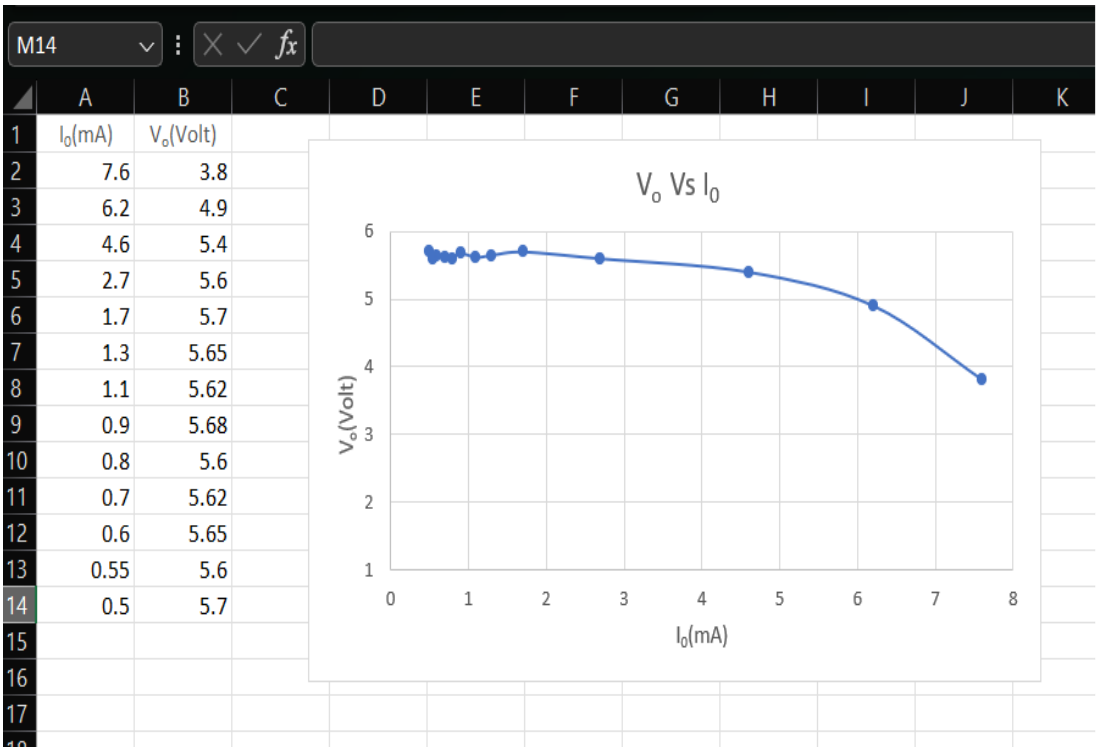

I_0(mA)	V_o(Volt)
7.6	3.8
6.2	4.9
4.6	5.4
2.7	5.6
1.7	5.7
1.3	5.65
1.1	5.62
0.9	5.68
0.8	5.6
0.7	5.62
0.6	5.65
0.55	5.6
0.5	5.7

Results:

The power supply circuit was thoroughly tested, and the output voltage (V_o) and current (I_o) were observed across a range of load resistances (R). The results were categorized into two operational regions based on the load conditions:

- **Regulation Region:**
  - **Load Resistances ≥ 2.2 kΩ:**
    - In this region, the Zener diode effectively regulated the output voltage. The voltage remained within the range of 5.6V to 5.7V across all load resistances from 2.2 kΩ to 10 kΩ. This indicates excellent voltage regulation, with only minor fluctuations.
    - The calculated load regulation was approximately 1.8%, which reflects the effectiveness of the Zener diode in maintaining a steady output despite small variations in load resistance.
    - The load current (I_o) ranged from 2.55 mA or less, indicating that the power supply performed well for low to moderate current demands.

- **Drop-Out Region:**
  - **Load Resistances < 2.2 kΩ:**
    - As the load resistance decreased, the output voltage gradually decreased as well. The voltage started to show a clear and consistent drop-off:
      - At 1 kΩ, the output voltage was 5.4V.
      - At 500 Ω, the output voltage decreased to 4.9V.
      - At the heaviest load of 250 Ω, the output voltage dropped to 3.8V.
    - This behavior indicates that the regulator entered its drop-out region, where it could no longer maintain the specified output voltage. The Zener diode was unable to conduct enough current to maintain a constant voltage due to the increased current demand from the lower resistance.

Key Findings:

- The regulator successfully maintained a stable output in the Regulation Region but failed to perform under higher current demands in the Drop-Out Region.
- The load current was directly related to the load resistance, following Ohm's Law (I = V/R). As the resistance decreased, the required current increased, leading to a larger voltage drop across the series resistor (R1), which in turn caused a reduction in the output voltage.

Discussion:

The experimental results presented in the previous section offer significant insights into the performance and limitations of the **Zener diode-based regulated power supply**. By closely analyzing the data and considering the theoretical concepts, we can draw meaningful conclusions regarding each stage of the power supply.

- **Regulation Region (Load Resistance ≥ 2.2 kΩ):**

  In the Regulation Region, the power supply maintained a stable output voltage of 5.6V to 5.7V across the entire range of load resistances (2.2 kΩ to 10 kΩ). This stable performance indicates that the Zener diode was functioning optimally in its reverse breakdown region. In this state, the Zener diode maintains a constant voltage by conducting current in the reverse direction, which is a typical feature of voltage regulators.

  - **Zener Diode's Role**: The Zener diode's ability to maintain a stable voltage despite fluctuations in load current is crucial in this region. As the load resistance increased, the current demand decreased. The Zener diode successfully compensated for this

by conducting only the amount of current needed to maintain the regulated voltage.

- **Load Regulation:** The load regulation of 1.8% is impressive for a simple shunt regulator like this one. Load regulation refers to the ability of the power supply to maintain a consistent output voltage as the load changes. A low load regulation value indicates that the power supply can maintain a stable voltage across varying current demands.

- **Current Draw in the Regulation Region:** The current drawn from the power supply in this region remained low (≤ 2.55 mA), which is typical for applications where the power supply is used to drive low-power devices. The design of the power supply appears to be well-suited for low-current applications, as the Zener diode effectively maintains regulation without excessive power loss.

➢ **Drop-Out Region (Load Resistance < 2.2 kΩ):**

When the load resistance decreased below 2.2 kΩ, the power supply entered its Drop-Out Region. This region is characterized by a gradual drop in output voltage as the load resistance continues to decrease. For example:

- At 1 kΩ, the output voltage was 5.4V.
- At 500 Ω, the output voltage dropped to 4.9V.
- At 250 Ω, the output voltage further dropped to 3.8V.

This behavior is consistent with the limitations of a shunt regulator. In the Drop-Out Region, the power supply could no longer maintain a constant output voltage because the demand for current exceeded the capacity of the regulator.

- **Current Demand and Voltage Drop:** According to Ohm's Law (I = V/R), as the load resistance decreases, the current demand increases. For a load of 250 Ω, the current would be 14.4 mA (I = 5.6V / 250 Ω). As the current increases, the voltage drops across the series resistor (R1) also increases, reducing the voltage available to the Zener diode. Eventually, this leads to the Zener diode ceasing to conduct, resulting in a significant drop in output voltage.

- **Characteristics of Drop-Out:** The Drop-Out Region is a fundamental limitation of the shunt regulator design. A shunt regulator like this one can only maintain regulation when the input voltage is sufficiently higher than the required output voltage. As the load draws more current, the input voltage available to the Zener diode becomes insufficient, and the regulator "drops out," allowing the output voltage to fall with the load.

➢ **Zener Diode Performance:**

The Zener diode proved to be effective in the Regulation Region, maintaining a stable output voltage despite changes in load resistance. However, its performance declined in the Drop-Out Region due to the increasing current demand. This behavior is expected for shunt

regulators as they have limited current handling capacity.

- **Reverse Breakdown Mode:** The Zener diode operates in reverse breakdown mode, where it maintains a constant voltage when the input voltage exceeds its breakdown voltage (in this case, around 5.6V). The Zener diode effectively "clamps" the voltage at its breakdown voltage by conducting excess current. However, once the current demand becomes too high, the voltage drop across the series resistor becomes too significant, and the Zener diode cannot maintain regulation.

➢ **Capacitor Filtering and Full-Wave Rectification:**

Before the Zener diode could regulate the voltage, the circuit first performed full-wave rectification and filtering. The full-wave rectifier used in the circuit ensures that both halves of the AC cycle is utilized, providing more efficient conversion from AC to DC. This is crucial for producing a smoother and more stable input voltage to the Zener diode.

- **Capacitor Role in Filtering:** The 470µF capacitor played a key role in filtering the ripple caused by the rectification process. During the peaks of the AC waveform, the capacitor charges up, and during the troughs, it discharges to fill in the gaps, providing a smoother DC voltage. The effectiveness of the capacitor in reducing ripple ensured that the Zener diode received a relatively smooth and steady DC voltage, allowing it to maintain regulation in the Regulation Region.

➢ **Load Current and Series Resistor:**
The series resistor (R1), which limits the current flowing into the Zener diode, was essential for preventing the diode from overheating or being damaged. At higher load currents, the voltage drops across the series resistor increases, contributing to the voltage reduction observed in the Drop-Out Region.

- The series resistor also served to limit the current to the Zener diode and ensure it operated within safe parameters. Without this resistor, the Zener diode would have been exposed to excessive current, potentially leading to failure.

➢ **Practical Implications and Applications:**

- The Regulation Region demonstrates that the power supply is suitable for low-power applications that require a stable voltage, such as powering small electronic circuits or devices that do not draw significant current.

- The Drop-Out Region highlights the limitations of this design for high-power applications. For devices that require more current, the output voltage will fall below the desired level, making the regulator unsuitable for such applications.

Conclusion:

This experiment provided a comprehensive analysis of a Zener diode-based regulated power supply. The key findings are as follows:

- The power supply performs effectively within its design limits for low current applications, with a stable output voltage of 5.6V to 5.7V for load resistances ≥ 2.2 kΩ.

- The Drop-Out Region revealed the limitations of the shunt regulator when handling higher current demands. Below 2.2 kΩ, the output voltage decreased significantly due to the increased current demand and the inability of the Zener diode to maintain regulation.

- Future improvements could include incorporating a pass transistor to handle higher current loads while still using the Zener diode for voltage regulation, allowing for a more robust and efficient design.

This project serves as a valuable introduction to the principles of power conversion, rectification, filtering, and voltage regulation, providing a solid foundation for future exploration into more advanced power supply designs.